Simply Better Connections

CS1764A

4-Port USB DVI/Audio KVMP™ Switch

The CubiQ™ CS1764A USB 2.0 DVI KVMP™ Switch charts a revolutionary new direction in KVM (Keyboard, Video, Mouse) switch functionality by combining a 4-port KVM switch with a 2-port USB 2.0 hub at the same time as it provides an interface for a digital monitor (DVI).

In addition, the CS1764A comes with ATEN's Video DynaSync™ technology, enhancing display resolution, and power-on detection. This means that if one computer is powered off, the CS1764A will automatically switch to the next powered-on computer.

Functioning as a KVM switch, it allows users to access 4 computers using a single USB keyboard, USB mouse, and monitor console. Operating as a USB 2.0 hub, it enables each computer to access peripherals connected to the hub one at a time.

Features

- One USB console controls four DVI computers and two additional USB 2.0 devices
- 2-port USB 2.0 hub built in
- Fully compliant with the USB 2.0 specification
- Computer selection via front panel pushbuttons and hotkeys
- Audio enabled - full bass response provides a rich experience for 2.1 channel surround sound systems
- Multiplatform support - Windows, Linux, Mac and Sun
- Superior video quality - 1920 x 1200, 60Hz; DDC2B
- Independent switching of KVM, USB, and Audio focus
- DVI digital and analog monitor support - fully compliant with the DVI specifications
- HDCP compliant
- Video DynaSync™ - stores the console monitor's EDID (Extended Display Identification Data) to optimize display resolution
- Power on detection - if one computer is powered off, the CS1764A will automatically switch to the next powered-on computer
- Console mouse port emulation/bypass feature supports most mouse drivers and multifunction mice
- Sun /Mac keyboard support and emulation*
- Auto Scan Mode for monitoring all computers
- Firmware upgradable via USB

* 1. PC keyboard combinations emulate Sun/Mac keyboards
2. Sun/Mac keyboards only work with their own computers

Specifications

Computer Connections	4
Port Selection	Hotkey, Pushbutton, Mouse
Connectors	
Console Ports	2 x USB Type A Female (White; front panel) 1 x DVI-I Female (White) 2 x Mini Stereo Jack Female (Green; 1 x front panel; 1 x rear panel) 2 x Mini Stereo Jack Female (Pink; 1 x front panel; 1 x rear panel)
KVM Ports	4 x USB Type B Female (White) 4 x DVI-I Female (White) 4 x Mini Stereo Jack Female (Green) 4 x Mini Stereo Jack Female (Pink)
Power	1 x DC Jack
USB Hub	2 x USB Type A Female (White; 1 x front panel, 1 x rear panel)
Switches	
Selected	4 x Pushbutton
LEDs	
USB Link	4 (Green)
On Line /Selected	4 (Orange)
Emulation	
Keyboard / Mouse	USB
Video	1920 x 1200@ 60Hz; DDC2B
Scan Interval	1–99 Seconds (Default: 5 sec.)
Power Consumption	DC5.3V:3.69W:43BTU/h Note: ● The measurement in Watts indicates the typical power consumption of the device with no external loading. ● The measurement in BTU/h indicates the power consumption of the device when it is fully loaded.
Environmental	
Operating Temperature	0 - 50°C
Storage Temperature	-20 - 60°C
Humidity	0-80% RH, Non-condensing
Physical Properties	
Housing	Metal
Weight	0.94 kg (2.07 lb)
Dimensions (L x W x H)	27.00 x 8.80 x 5.55 cm (10.63 x 3.46 x 2.19 in.)
Note	For some of rack mount products, please note that the standard physical dimensions of WxDxH are expressed using a LxWxH format.

Diagram

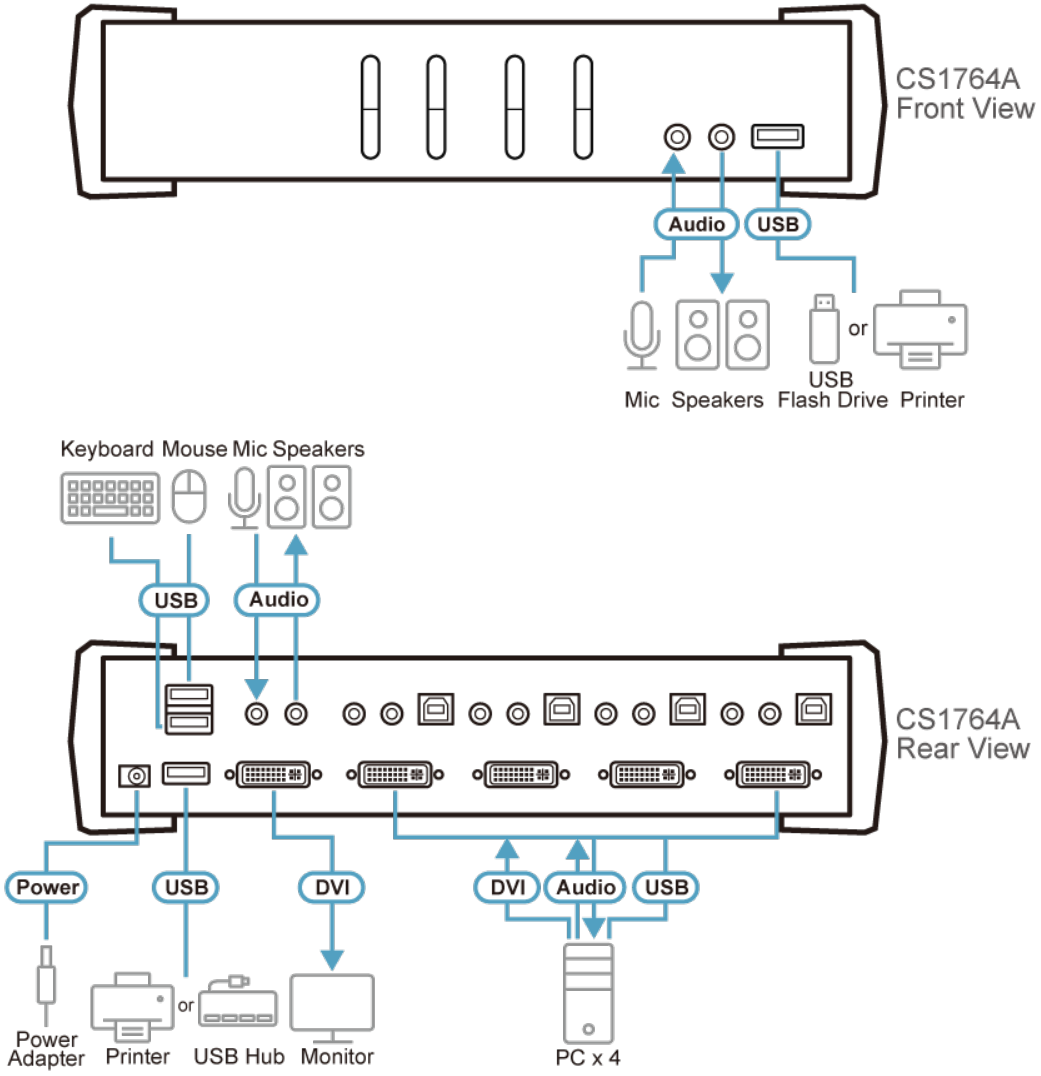

ATEN International Co., Ltd.
3F., No.125, Sec. 2, Datong Rd., Sijhih District., New Taipei City 221, Taiwan
Phone: 886-2-8692-6789 Fax: 886-2-8692-6767
www.aten.com E-mail: marketing@aten.com

© Copyright 2015 ATEN® International Co., Ltd.
ATEN and the ATEN logo are trademarks of ATEN International Co., Ltd.
All rights reserved. All other trademarks are the property of their respective owners.